Aero 20 - Technical Data Sheet

14CARBON is a registered trademark brand owned by Nanocat BV.
Tjalke van der Walstraat 42N
8723CA Koudum
The Netherlands

T: +31 514 581 400
E: info@14carbon.nl
W: www.14carbon.com

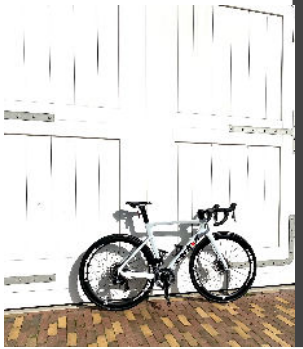

V2021#2.1

Aero 20 - Specifications

14CARBON is a registered trademark brand owned by Nanocat BV.
Tjalke van der Walstraat 42N
8723CA Koudum
The Netherlands

T: +31 514 581 400
E: info@14carbon.nl
W: www.14carbon.com

Design:	TT-V19
Author:	T. Tuinstra, Msc
Use:	Road Endurance, Race Competition & Time Trial, Triathlon
Materials:	T800: Carbon T800 fiber composite XCR: Carbon-Twaron hybrid fiber composite
Brake:	Flat Mount Hydraulic Disc Brake
Headset:	1 ½- 1 ⅛ inch tapered
Bottom Bracket:	BB86 press fit
Cable:	All internal cable routing
Weight frame:	1050-1265gr (T800), XCR frames are 160grs heavier
Weight parts:	fork ca 420gr, seatpost ca 320gr and handlebar ca 370gr
Wheelsize:	700*28C
Tire size:	21-34mm
True axle:	100*12mm,142*12mm (steekas)
Discs	Front: 140mm/160mm Rear: 140mm/160mm
Tested:	SGS / ISO4210-6
HT stiffness:	9.3 N/mm, quoted as ‘Excellent’ in size 58cm
BB stiffness:	162.2 N/mm, quoted as ‘Highly Excellent’ in size 58cm
UCI:	compliant to UCI road competition standards
Wheels:	38mm/50mm T800 carbon, UCI compliant, Sapim spokes, DT Swiss hubs
Coating:	all colors/effects possible with options for ceramic coating and hydrophobic sealants

Aero 20 - Specifications

14CARBON is a registered
trademark brand owned
by Nanocat BV.
Tjalke van der Walstraat 42N
8723CA Koudum
The Netherlands

T: +31 514 581 400
E: info@14carbon.nl
W: www.14carbon.com

Tapered 1-1/2" ,1-1/2"

Flat Mount For 160mm

Electronic switch

Aerodynamic design

Concealed seat clamp

Front derailleur

adjust saddle tube 7&11mm

Different angles

BB86

Disc—flat mount 140mm

Thru axle 142*12mm

Di2 Battery

Aero 20 - Geometry

14CARBON is a registered trademark brand owned by Nanocat BV.
Tjalke van der Walstraat 42N
8723CA Koudum
The Netherlands

T: +31 514 581 400
E: info@14carbon.nl
W: www.14carbon.com

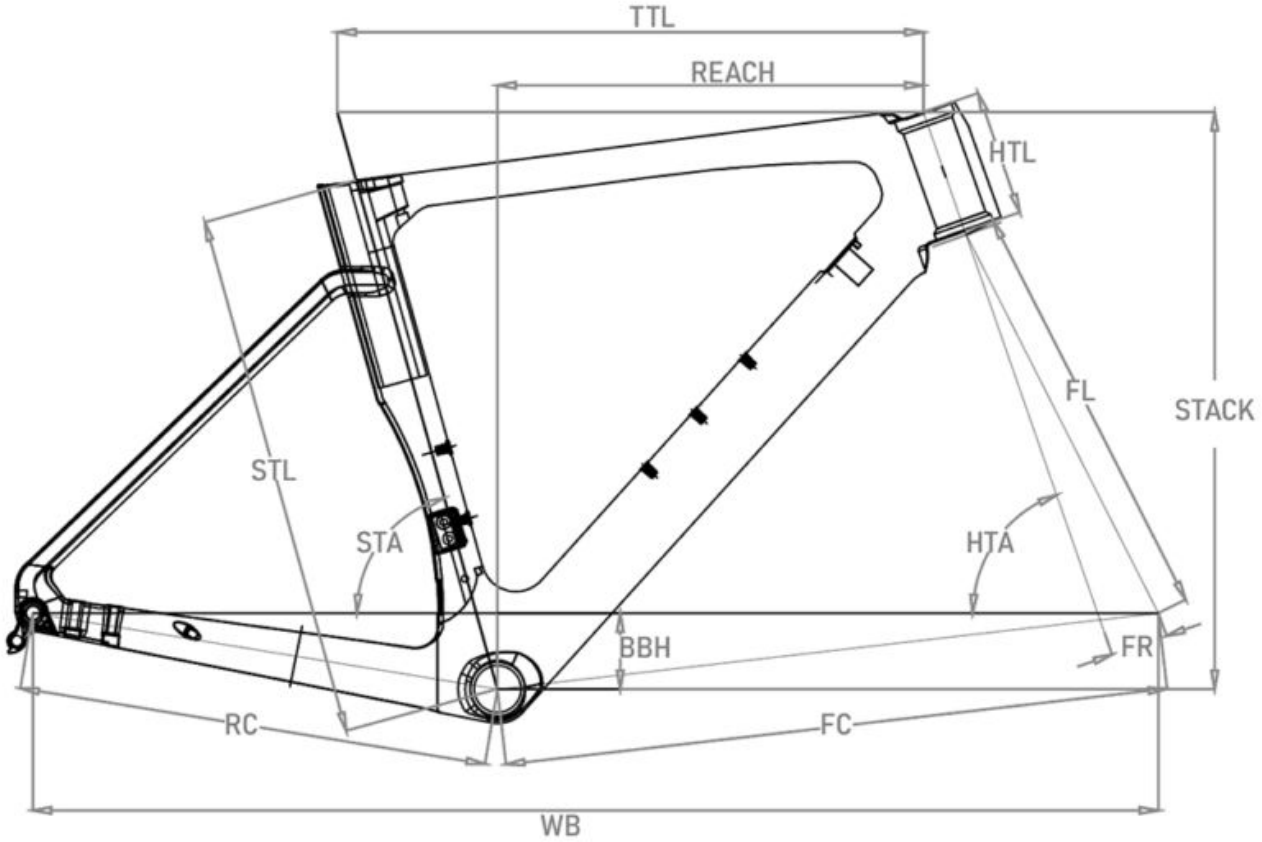

Aero 20 - Geometry

14CARBON is a registered trademark brand owned by Nanocat BV.
Tjalke van der Walstraat 42N
8723CA Koudum
The Netherlands

T: +31 514 581 400
E: info@14carbon.nl
W: www.14carbon.com

Size		XS (46cm) 155-165cm	S (49cm) 165-175cm	M(52cm) 175-184cm	L(54cm) 185-193cm	XL(56cm) 194-198cm	XXL(58cm) >199cm
HTA	Head tube angle°	70.8 °	71.0 °	72.0 °	72.5 °	73.0 °	73.3 °
HTL	Head tube length°	110 mm	115 mm	130 mm	150.0 mm	170.0 mm	190.0 mm
TT(L)	Top tube horizontal	510.6 mm	520.0 mm	535.0 mm	550.0 mm	565.0 mm	580.0 mm
WB	Wheel base	980.5 mm	988.9 mm	991.0 mm	997.8 mm	1005.1 mm	1013.7 mm
FC	Front Center	579.6 mm	588.0 mm	590.0 mm	596.8 mm	604.0 mm	612.6 mm
STL(H)	BB to top	460.0 mm	490.0 mm	520.0 mm	540.0 mm	560.0 mm	580.0 mm
SA	Seat Angle	74.5 °	74.5 °	74.0 °	73.6 °	73.3 °	73.0 °
REACH	Reach	371.2 mm	378.9 mm	384.0 mm	388.8 mm	394.5 mm	400.0 mm
STACK	Stack	502.6 mm	509.0 mm	526.7 mm	547.6 mm	568.5 mm	588.7 mm

FL(Axle to crown) in all sizes is 370.0 mm, BBH(BB height) in all sizes is 66.0 mm, FR (Fork Rake) in all sizes is 50.0 mm, Chainstay is 410mm in all sizes.

Aero 20 - References

14CARBON is a registered trademark brand owned by Nanocat BV.
Tjalke van der Walstraat 42N
8723CA Koudum
The Netherlands

T: +31 514 581 400
E: info@14carbon.nl
W: www.14carbon.com

De Aero 20 is geliefd bij liefhebbers en professionals, vanwege zijn extreme stijfheid en response, maar ook om zijn 'nice looks'. Zonder verlies van comfort is de Aero 20 een volbloed racer waar je records mee rijdt.

Het Houttec Cycling Team (#houttecyclingteam) en bekende schaatsers als Mark Prinsen, Ids Postma en Yep Kramer trainen en rijden wedstrijden op de Aero 20.

Diverse ambassadors op Instagram en Facebook geven je graag meer info.

De AERO 20 doorloopt een UCI certificatie, goedkeuring wordt in 2022 verwacht.

carbon

HOUTTEC
Veit van der Feer
carbon